Introduction to Additive Manufacturing Software 204

Welcome to the Tooling University. This course is designed to be used in conjunction with the online version of this class. The online version can be found at https://www.toolingu.com. We offer high quality web-based e-learning that focuses on today's industrial manufacturing training needs. We deliver superior training content over the Internet using text, photos, video, audio, and illustrations. Our courses contain "roll-up-your-sleeves" content that offers real-world solutions on subjects such as Metal Cutting, Workholding, Materials, and CNC with much more to follow. Today's businesses face the challenge of maintaining a trained workforce. Companies must locate apprenticeship programs, cover travel and lodging expenses, and disrupt operations to cover training needs. Our web-based training offers low-cost, all-access courses and services to maximize your training initiatives.

© Copyright 2023 Tooling University, LLC. All rights reserved.

Copyright © 2023 Tooling U, LLC. All Rights Reserved.

Class Outline

Additive Manufacturing
AM Software Categories
AM Software Workflows
AM Software Categories and Workflows Review
Design Software
Verification
Processing Software
Quality Control
Information Management
Security Software
Software Types Review

Copyright © 2023 Tooling U, LLC. All Rights Reserved.

Lesson: 1/11

Additive Manufacturing

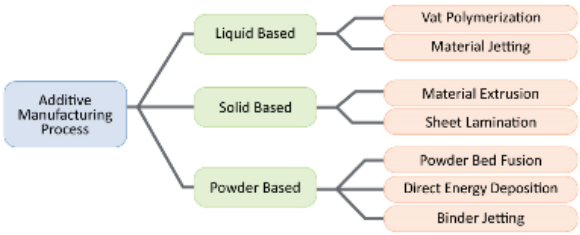

Software has always been a part of the development of additive manufacturing (AM) since its initial conception in 1981. Additive manufacturing describes a set of relatively new production operations that build objects through layering and fusing raw material. There are seven major categories of AM processes, which generally use three types of raw material: powder, liquid, and solid.

- Powder-based AM processes include: direct energy deposition (DED), binder jetting and powder bed fusion (PBF).
- Liquid-based AM processes include: vat photopolymerization and material jetting.
- Solid-based AM processes include: sheet lamination and material extrusion.

Despite having a variety of methods that utilize different materials, AM processes generally follow the same basic steps during the manufacturing workflow. Different software categories connect each step of the AM workflow. Combined, these software categories enable AM methods to have several different uses like building end-use parts, rapid prototyping, or implementing as a secondary process.

This material is based upon research supported by, or in part by, the U.S. Office of Naval Research under award number N00014-19-1-2742.

Copyright © 2023 Tooling U, LLC. All Rights Reserved.

AM Software Categories

In the design step, engineers can use software to focus on optimizing functionality. Software can also enable engineers to customize and easily modify the internal and external structures of a design. With some AM processes, engineers can also use software to change or combine the material type and composition in specific areas of the part.

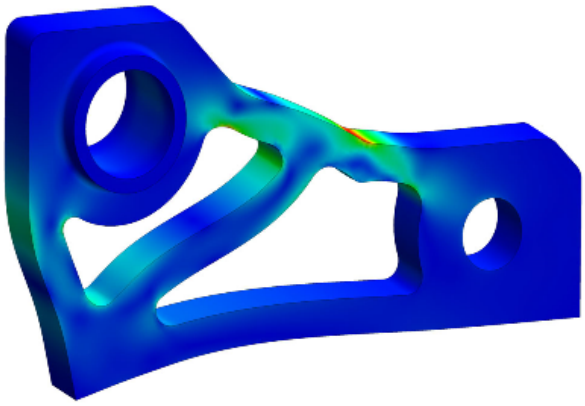

In the verification step, engineers can use software to subject the 3D model to real-world and real-time situations. Simulation tools in verification software allow engineers to evaluate the behavior of the design under real conditions before production.

In the processing step, operators load the 3D file into the machine software and export as a G code file before printing on the machine. The software user will typically have to select where to place the object and may have to adjust machine settings from within the process software. For example, an operator may adjust the scale or the layer thickness of the part from a smartphone app, laptop, or an HMI on the machine. Usually, any adjustments before exporting are automatically made to the part program.

Copyright © 2023 Tooling U, LLC. All Rights Reserved.

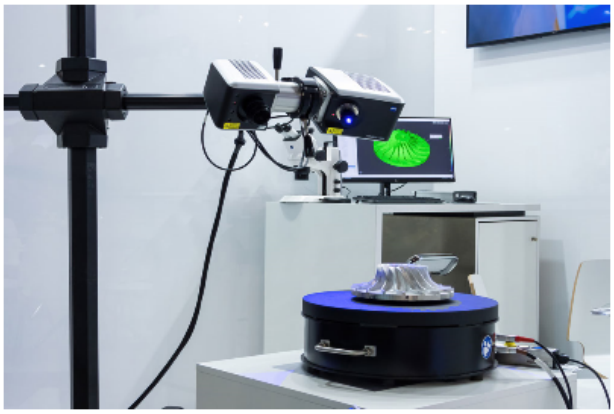

During the quality control step, inspection software monitors machine and sensor data to ensure all parts and products meet design and regulatory standards during AM production. For example, an inspector could use a laser scanner and different types of software to create a collection of data points called a point cloud to validate the conformance of the part to design requirements.

During the information management step, engineers use software to track the various stages of product development to assist with things like resource planning and lifecycle management, which can show a designer how the changes to a prototype might affect the costs associated with making the end-use product. Resource planning information can also be used to manage supply chain fulfillment operations, from receiving raw materials to shipping finished goods. In the security step, cybersecurity software protects these information exchanges as they travel over the Industrial Internet of Things (IIoT).

Copyright © 2023 Tooling U, LLC. All Rights Reserved.

Lesson: 3/11

AM Software Workflows

The AM software workflow is typically directed by two main areas of consideration: functionality, or the desired performance, and application of a new object. Sometimes, the specific capabilities of the AM process can affect the software workflow. For example, vat photopolymerization can only build with one material at a time, but material jetting can build with multiple materials in the same print. If a prototype requires only one material, it may be easier and cheaper to use vat photopolymerization.

Although each software category has a distinct function, one software platform may incorporate multiple types of software functions. For example, designing, processing, and verification software can work together one software platform in the conceptualization, or visualization of an AM object. Sensors and devices connected to the AM workflow can capture data and help engineers make better and more functional parts. In rapid prototyping, some engineers may use this data to create several iterations of a part in order to improve functionality. In other instances, engineers may combine quality, security, and information management software in the production segment of the manufacturing process.

Video content available online.

Copyright © 2023 Tooling U, LLC. All Rights Reserved.

Lesson: 4/11

AM Software Categories and Workflows Review

1. Solid-based AM processes include vat photopolymerization. **FALSE**
2. Powder-based AM processes include directed energy deposition. **TRUE**
3. To harness AM part complexity, engineers typically use computer-aided design to create a 3D design model of a part. **TRUE**
4. Design software protects information exchanges as they travel over the Industrial Internet of Things. **FALSE**
5. One of the two major concentrations of AM software workflow is functionality. **TRUE**
6. Many AM software categories often cancel each other out during the manufacturing process. **FALSE**

Copyright © 2023 Tooling U, LLC. All Rights Reserved.

Design Software

Despite their differences in methods and material types, each AM process builds an object by stacking and bonding thin layers of material. Because AM design is not restricted by the shape of raw material like traditional manufacturing, it gives engineers more freedom to create complex features and optimize part design. To harness AM part complexity, engineers typically use computer-aided design (CAD) software to create a 3D model of a part. The CAD model is a digital representation of the physical part before it goes into the verification and processing steps.

Because many AM machines cannot directly read CAD files, an engineer must convert the CAD file into an STL file format. The STL software converts the part's geometry into a sequence of interconnected triangles that represent the external surface of the part. For AM methods like material jetting that can create a single object with multiple materials, an engineer will need to create a separate STL file for each material area. In addition, if an AM design requires blended materials, an engineer will need software that creates a VRML, AMF, or OBJ file, which communicates information like color and surface quality to an AM machine. Although CAD, STL, VRML, and OBJ files have distinct functions within the AM process, some software outlets may bundle them into a single commercial package when purchased.

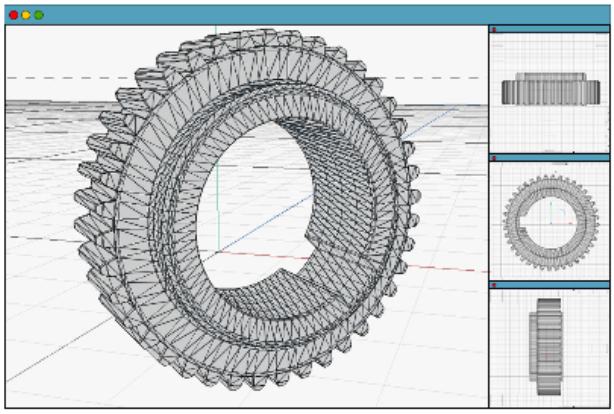

Figure 1: STL File

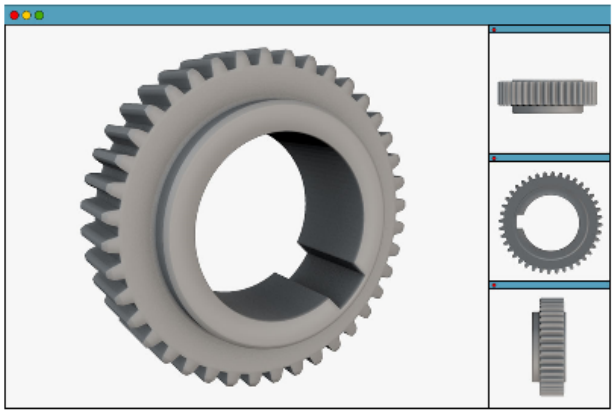

Figure 2: CAD File

Copyright © 2023 Tooling U, LLC. All Rights Reserved.

Lesson: 6/11

Verification
Once the initial design of an object is complete in CAD, an engineer can use computer-aided engineering (CAE) software to verify or test its functionality in real-world conditions. For example, engineers can use verification software to test the integrity of an object. Engineers can also add lattice structures to reduce the weight of an object without losing any strength. Engineers can utilize CAE software to assist with topology optimization (TO), which uses complex mathematical algorithms to determine the least amount of material that can be used in specific areas of a part without compromising part functionality.

Some advanced CAE software can create a dynamic virtual model of an object called a digital twin. In the verification step, digital twins can virtually simulate operational and environmental conditions to precisely reflect real-word conditions in real time utilizing a digital thread, which represents an integrated view of all the data and information about a machine or process throughout its lifecycle. Using CAE software can reduce the costs associated with making several iterations of a prototype.

Video content available online.

Copyright © 2023 Tooling U, LLC. All Rights Reserved.

Processing Software

Computer-aided manufacturing (CAM) describes computer software programming that generates the path a machine tool must follow to create a part or part feature, which helps automate manufacturing processes. In the processing step, slicer software breaks the triangles of STL files into layers of material that the AM machine will use to create the object. The slicer software can translate the material layers into toolpaths to build the object design. Slicer software can either be separate computer programs or part of the machine interface.

For many AM machines, CAM software converts the layer information into G code, a numerical programming language that controls the functions and motions of the machine. In a standard AM process such as material extrusion, the G code program directs the back-and-forth movement of the print head, operating temperatures for the nozzle and print bed, and other machine commands such as changing materials or colors. Some advanced AM processes may use other CAM file formats or use proprietary formats specific to the machine manufacturer. Since CAM software works so closely with CAD and CAE software, knowledge of CAM can help optimize the design and verification steps.

Figure 1:

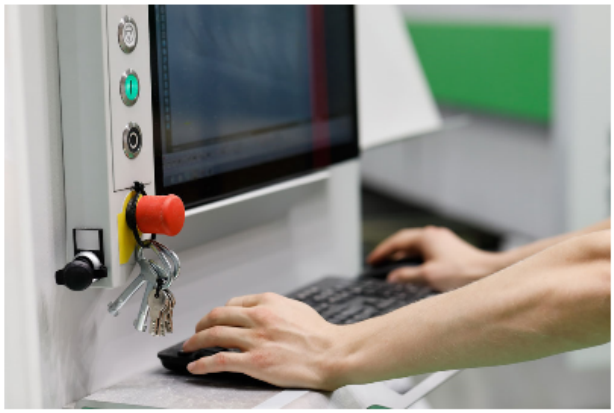

Figure 2:

Copyright © 2023 Tooling U, LLC. All Rights Reserved.

Quality Control

Engineers and operators utilize inspection software to test and qualify part quality through the build process. Utilizing the IIoT, sensors can collect and analyze data from AM machines and transmit the information to other devices or equipment. For example, sensors can pick up unusual vibrations in a printer head of a material extrusion machine or detect an issue with the vacuum seal of a DED machine during the building process. When transmitted through IIoT devices, this real-time data can alert an operator to repair or correct the AM issue as quickly as possible, saving time and potential material costs.

Quality control software can also help evaluate a part's functionality without damaging the part. For example, X-ray computed tomography (X-ray CT) is a common method of nondestructive testing that creates a detailed 3D representation of a part's interior. Inspectors can use X-ray CT to measure the small paces or voids within a part to make sure it meets quality standards.

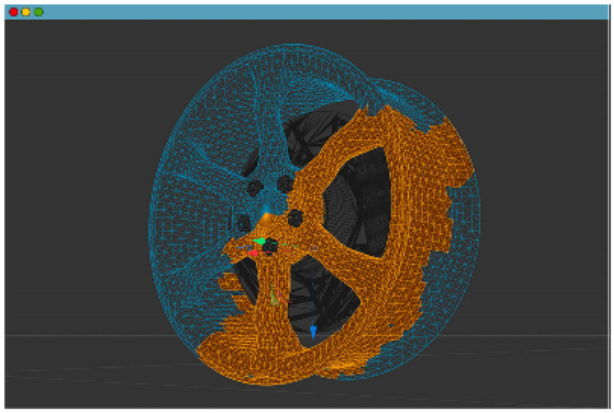

Figure 1:

Figure 2:

Copyright © 2023 Tooling U, LLC. All Rights Reserved.

Lesson: 9/11

Information Management
AM often uses manufacturing execution systems (MES) software, also known as manufacturing operations management (MOM), to connect physical production to other types of information management software. Other types of information management software include enterprise resource planning systems (ERP), which tie together business processes like finance and shipping, and process control systems (PCS), which capture operational process data like sensor data and personnel performance. Information management software can use data collected from various types of design, verification, processing, and quality software to develop complex mathematical processes, or algorithms, which help reduce operating costs and assist with optimizing overall production. Information software can track things like machine usage data, material usage data, and design time to help minimize the effects of maintenance downtime on overall AM production.

Video content available online.

Copyright © 2023 Tooling U, LLC. All Rights Reserved.

Lesson: 10/11

Security Software

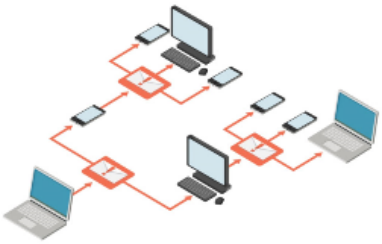

Despite the benefits of sensor data collection to maintain quality, interconnectivity of the IIoT exposes AM machines to the risk of a cyberattack, which describes any attempt by a malicious actor to harm or illegally access a digital system. Cyberattacks typically involve illegal, unauthorized attempts by external hackers to gain access to a system or network but may also potentially come from within an organization. Installing anti-malware and other cybersecurity software can protect AM systems from malware like viruses, which copy itself onto a computer or device by attaching to existing code. Without cybersecurity, viruses can spread from one device to another.

Many cybersecurity products come preinstalled on computers or through a subscription. In addition, using robust passwords and group permissions to restrict access to files on operating systems can help protect AM machines and related devices.

Copyright © 2023 Tooling U, LLC. All Rights Reserved.

Lesson: 11/11

Software Types Review

- **STL**: A type of design software that converts the geometry into a sequence of interconnected triangles.
- **X-ray CT**: A device that uses quality control software to measure the small paces or voids in a part.
- **CAE**: A type of verification software used to test a part's functionality in real-world conditions.
- **CAM**: A type of processing software that generates the path a machine tool must follow.
- **PCS**: A type of information management software that captures operational information like sensor data.

Copyright © 2023 Tooling U, LLC. All Rights Reserved.

Class Vocabulary

3D Printing	The process of producing a three-dimensional object using a specialized tool that creates successive layers of material. 3D printing is often used interchangeably with additive manufacturing.
Additive Manufacturing	AM. The process of joining or solidifying materials to make an object based on a three-dimensional computer model. Additive manufacturing methods typically build up layers of material to create an object.
Algorithms	A mathematical process designed to systematically solve a problem. Algorithms allow machine learning to predict and regulate complex digital operations.
AM	Additive manufacturing. The process of joining or solidifying materials to make an object based on a three-dimensional computer model. AM methods typically build up layers of material to create an object.
AMF	Additive Manufacturing File. A newer file format for use in additive manufacturing that contains data for colors, materials, and other part features. The AMF format allows for more complex shapes than the standard STL format, including curved triangles.
Anti-Malware	Security software that protects against various types of malware, especially newer threats. Many anti-malware products protect against the latest malware and may not include protection against some older malware types.
App	Application. Software or a program that is designed for mobile devices, such as smart phones and tablets. Apps are a way of interacting with smart devices.
Binder Jetting	An additive manufacturing method in which liquid binder is used to join powdered materials to create parts. Binder jetting can create parts out of metal, polymer, or ceramic.
CAD	Computer-aided design. A type of computer software used to design a model of a product. CAD models are converted into STL or other formats for use by additive manufacturing machines.
Computer-Aided Design	CAD. A type of computer software used to design a model of a product. Computer-aided design models are converted into STL or other formats for use by additive manufacturing machines.
Computer-Aided Engineering	CAE. Computer software that helps part manufacturers with the functionality aspect of part design. Computer-aided engineering is helpful in assessing how a part will respond to exposure to a load, fluid movement, and other real-world conditions.
Computer-Aided Manufacturing	CAM. The use of computer software that facilitates the development of part programs to produce a part. Computer-aided manufacturing software for additive manufacturing generates the program code from information that the programmer inputs, which automates more of the process than CAM software used in traditional manufacturing.
Conceptualization	The process of forming an idea about a possible part or manufactured good. Conceptualization is the initial stage of design for manufacturing (DFM) and design for additive manufacturing (DFAM).
Cyberattack	An effort to disrupt, disable, or gain illegal access to a cyber network or device. Cyberattacks include hacking, phishing, and malware.
Cybersecurity	Protection against criminal or unauthorized access to computer networks, programs, and data. Cybersecurity has become a major industrial concern as networking and connectivity have increased.
DED	Directed Energy Deposition. An additive manufacturing process in which focused thermal energy is used to melt materials as they are fed or blown through a nozzle. DED is often used with powdered or wire metal.
Design	The process of creating the specifications for a part. Design involves defining product requirements and creating prints, digital models, and prototypes for a part.
Digital Thread	An integrated view of all the data and information about a machine or process throughout its

Copyright © 2023 Tooling U, LLC. All Rights Reserved.

lifecycle. The digital thread connects information from all aspects of a product into one seamless network.

Digital Twin A virtual representation of a physical asset or part. A digital twin evolves with the asset throughout its product lifecycle.

Direct Energy Deposition DED. An additive manufacturing process in which focused thermal energy is used to melt materials as they are fed or blown through a nozzle. Directed energy deposition is often used with powdered or wire metal.

Dynamic Something capable of constant change and continuous productivity. Dynamic models like digital twins are improvements on traditional 3D models with limited capabilities.

End-Use Designed to be used directly by a consumer or directly in another manufactured product. End-use products created by additive manufacturing include medical implants, custom dental devices, and camera equipment.

Enterprise Resource Planning Systems ERP. A specific application of a management information system that takes the data from internal and external information systems and integrates it throughout the organization. Enterprise resource planning is often integrated into the product lifecycle management of cyber-physical manufacturing via the digital thread.

Functionality The ability of a part to optimally perform a set purpose. Functionality is a key design consideration, particularly for additive manufacturing parts.

G Code A method of programming that pairs address letters with numerical values to form words. G code programs are used in additive manufacturing, CNC machining, and hybrid machining.

IIoT Industrial Internet of Things. A network of physical devices used in manufacturing that contain computing systems that allow them to send and receive data. The IIoT allows devices to exchange data and automate processes without any human intervention.

Industrial Internet Of Things IIoT. A network of physical devices used in manufacturing that contain computing systems that allow them to send and receive data. The Industrial Internet of Things allows devices to exchange data and automate processes without any human intervention.

Information Management The process of using software that integrates and manages all process data that relates to ensuring quality compliance. Information management systems can connect data from multiple processes across the product lifecycle.

Laser A type of instrument that emits an intense, narrow beam of light to measure part features. Laser light yields very accurate and consistent measurements.

Lattice Structures A repeating, symmetrical pattern of crossing strips of material that leave diamond- or square-shaped gaps between them. Lattice structures provide excellent strength to a part while reducing its weight.

Malware Any malicious code or software that can potentially harm a computer, device, or network, or retrieve data from the network or device without authorization. Malware often exists undetected on systems for extended periods of time.

Manufacturing Execution Systems MES. A software application that monitors and analyzes machine performance data related to processing materials and producing finished products. Manufacturing execution system applications can be used to integrate performance data from multiple machines in a product lifecycle execution (PLE) system.

Material Extrusion An additive manufacturing (AM) method that uses a nozzle to dispense material, usually a thermoplastic filament, onto a build platform. Material extrusion is sometimes referred to as fused deposition modeling (FDM).

Material Jetting An additive manufacturing process in which droplets of build material are selectively deposited onto a build platform. Material jetting, or PolyJetting, systems use a photopolymer that is cured by ultraviolet (UV) light.

OBJ Object file. A software file format that can represent the color, texture, and complex surface geometry of 3D models. OBJ files are used in material jetting, similar to VRML files, to designate color or texture on a per face, or section, basis.

Point Cloud A large collection of data points indicating locations on the surface of a three-dimensional object. Point clouds are typically used to create CAD models of objects.

Powder Bed Fusion PBF. An additive manufacturing method that uses thermal energy to fuse together layers of

Copyright © 2023 Tooling U, LLC. All Rights Reserved.

powdered polymer, metal, ceramic, or other material. Powder bed fusion includes several processes, such as selective laser sintering (SLS) and direct metal laser sintering (DMLS).

Process Control A method of checking product performance and batch consistency by regularly measuring and regulating processes that yield a product. Process control involves collecting and analyzing data to help reduce error.

Processing A step in the additive manufacturing production workflow that leverages software to execute program functions and manipulate data. Processing software in additive manufacturing typically slices a design file into part layers and exports machine functions and commands as G code, which enables a machine to produce the physical part.

Prototype A part model made to represent the composition and design of the final part. Prototypes are used to test how a part will perform in its intended application.

Quality Control An approach to manufacturing that focuses on customer satisfaction. Quality control ensures that products conform to specifications, are free of defects, and meet the requirements of their anticipated use.

Rapid Prototyping A product development technique in which additive manufacturing methods are used to create prototypes for a traditional manufacturing operation. Rapid prototyping allows engineers to quickly create a number of prototypes in a short time period, reducing lead time.

Raw Material An unprocessed or lightly processed substance, often referred to as feedstock, that is used in additive manufacturing (AM) machines to build parts or components. Raw materials for AM commonly come in powder, pellet, wire, or semi-liquid form.

Real Time The near-instantaneous interval of time that computers require to process data. Real time is virtually the same as actual time because computers process data nearly immediately.

Secondary Process An additive manufacturing application other than creating a prototype or end-use part. Secondary processes include using AM to create a jig or fixture, help create a mold, or repair a damaged workpiece, among other processes.

Sensor A device that detects a change in a physical stimulus and turns it into a signal that can be measured or recorded. Sensors may be connected to a machine or system in order to collect operational data that is later analyzed.

Sheet Lamination An additive manufacturing process that forms an object by bonding sheets of material together using an adhesive, heat, or pressure. Sheet lamination processes melt thin sheets of material together, bonding them layer by layer, to form a single three-dimensional object.

Slicer Software A computer program that divides an STL file into layers for additive manufacturing (AM). Slicer software can either be a separate computer program or part of the machine interface.

STL A software file format that represents 3D digital models as a series of interconnected triangles. STL files are used in additive manufacturing processes.

Topology Optimization TO. A mathematical method that optimizes material layout within a given design space for a given set of loads, boundary conditions, and constraints with the goal of maximizing the performance of a part. Topology optimization is a potent tool for lightweighting.

Traditional Manufacturing A manufacturing process that involves creating a part by shaping or removing material from a workpiece. Traditional manufacturing operations include metal cutting and forming.

Vat Photopolymerization An additive manufacturing method that builds a part by curing layers of photopolymer with light. Vat photopolymerization processes include stereolithography (SLA) and digital light processing (DLP).

Verification The process of using software to duplicate real-world and real-time situations in order to evaluate behavior under real conditions. Verification through simulations can test the behavior of a manufacturing process before it is used to make an actual product.

Viruses A type of malware that copies itself onto a computer or device by attaching to existing code. Viruses must be transferred by a user in order to spread to other systems.

VRML Virtual Reality Modeling Language. A software file format that can represent the color and texture of 3D models. VRML files are used in material jetting, similar to OBJ files, to designate color or texture on a per face, or section, basis.

X-Ray Computed Tomography X-ray CT. An advanced radiographic NDT method that creates a three-dimensional (3D) image of a part's interior and exterior out of multiple two-dimensional (2D) radiographs. X-ray computed tomography, which is sometimes referred to as micro computed tomography

Copyright © 2023 Tooling U, LLC. All Rights Reserved.

computed tomography, which is sometimes referred to as micro computed tomography (microCT), produces high-resolution images that show very fine part details.

Copyright © 2023 Tooling U, LLC. All Rights Reserved.